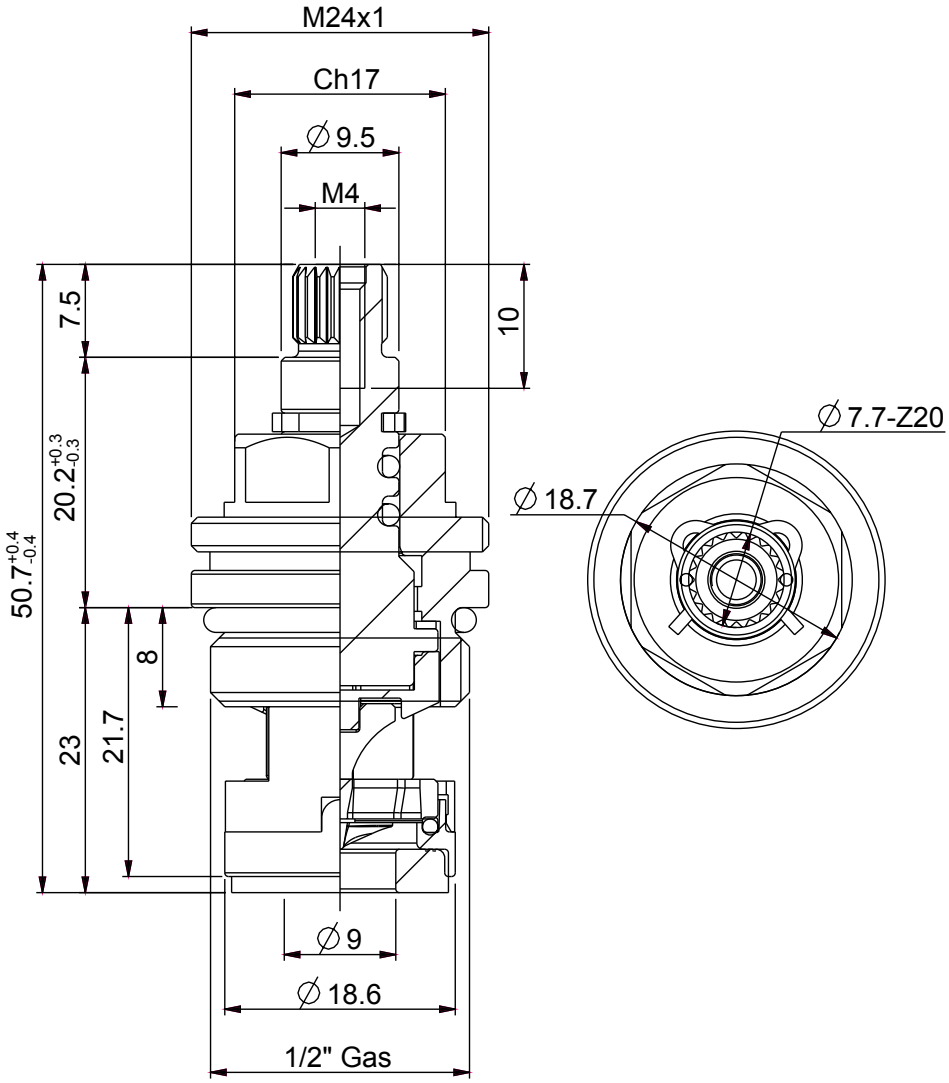
M24x1
Ch17
∅9.5
M4
7.5
10
20.2+0.3-0.3
50.7+0.4-0.4
8
21.7
23
∅9
∅18.6
1/2" Gas
∅7.7-Z20
∅18.7